Email: info@hansenproducts.com
Website: www.hansenproducts.com

Max~Flo

Diaphragm Valve Technical Specifications

Max~Flo Features and Benefits

- High Performance, Cost Effective Trough/Tank Valve (29 PSI, 570 l/min)
- Suitable for Side, Bottom and Top entry
- Strong Compact Design
- Delivers high volumes of water quickly with un-restricted full flow
- Patent pending* "Self Cleaning Pilot" for use in clean/dirty water
- Low operating pressure required reducing pumping costs and increasing flow
- Manufactured from strong, non corrosive UV stabilised materials
- Mini body design to enable easy installation
- Available in Female and Male BSPT, NPT and ACME thread configurations
- Suitable for High/Low Pressure operations - from 0.2 bar to 12 bar
- Variable open and close action preventing valve bounce and water hammer
- Max~Flo Diaphragm Valve is supplied with: Glass Fibre Reinforced Nylon Complete Valve Body, Threaded Adaptors, Adjustable Extension Arm, 100mm Blue Flanged Float and 600mm Cord.

*NB Adaptor Configurations vaty per pack

*This product is patent and registered design pending in NZ and other countries and is copyright. Hi~Flo, Max~Flo, and Super~Flo are trade marks of Hansen Products Ltd.

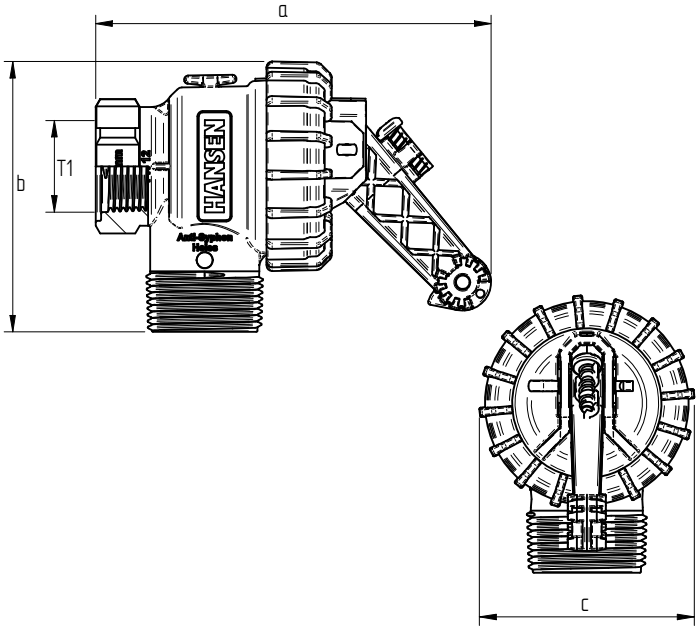

Max~Flo Dimensions

Product Code	T1 BSPT (DN)	a mm	b mm	c mm
HMFDV2520	1" (25mm)	144	98	76
HMFDV3225	1" (25mm)	144	98	76
HMFDV2520L	1" (25mm)	144	98	76
HMFDV3225L	1" (25mm)	144	98	76

Product	T1 BSPT	T2 BSPT	a mm	b mm	c mm
SHORT TAIL ADAPTORS					
15mm Adaptor BSPT	1" (25mm)	1/2" (15mm)	48	21.5	47
20mm Adaptor BSPT	1" (25mm)	3/4" (20mm)	48	28.5	48.5
25mm Adaptor BSPT	1" (25mm)	1" (25mm)	48	31.5	51.5
32mm Adaptor BSPT	1" (25mm)	1 1/4" (32mm)	48	31.5	51.8
40mm Adaptor BSPT	1" (25mm)	1 1/2" (40mm)	49	38.5	58.5
50mm Adaptor BSPT	1" (25mm)	2" (50mm)	60.5	44	64
LONG TAIL ADAPTORS					
15mm Adaptor BSPT	1" (25mm)	1/2" (15mm)	48	72	92.7
20mm Adaptor BSPT	1" (25mm)	3/4" (20mm)	48	77.5	97.5
25mm Adaptor BSPT	1" (25mm)	1" (25mm)	54	77.5	97.5
32mm Adaptor BSPT	1" (25mm)	1 1/4" (32mm)	64	85.5	105.5

Adaptor Dimensions

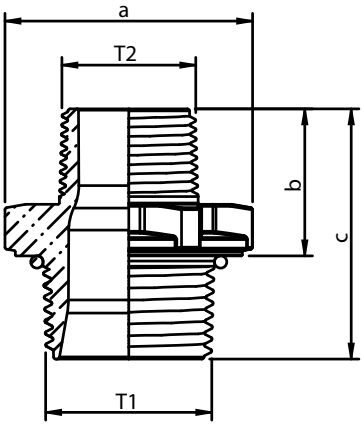

Max~Flo Parts and Materials

The Max~Flo Diaphragm Valve is manufactured from Potable Water approved materials

- **Diaphragm Valve Body** – Glass Fibre Reinforced Nylon
- **Diaphragm** – Nitrile Rubber
- **Guide Bush** – Glass Fibre Reinforced Nylon
- **Spring** – Stainless Steel
- **Split Pin** – Stainless Steel
- **Valve Body Cap** – Acetal
- **Guide Pin** – Stainless Steel
- **Valve Body Cap Nut** – Glass Fibre Reinforced Nylon
- **Arm Seal** – Thermoplastic Polyurethane Elastomer
- **Short Control Arm** – Glass Fibre Reinforced Nylon
- **100mm Flanged Float** – High Density Polyethylene
- **Screws** – Stainless Steel
- **Adjustable Extension Arm** – Glass Fibre Reinforced Nylon
- **Cord** – Polyester

Adaptors
- **Adaptor** – Glass Fibre Reinforced Nylon
- **Adaptor O-Ring** – Portable Water Approved

Float
- **Float** – High Density Polyethylene
- **Thread Insert** – Glass Fibre Reinforced Nylon

Max~Flo Working Pressures

The Hansen Max~Flo Valve will operate from 0.2 Bar to 12 Bar

Max~Flo Valve Flow Chart

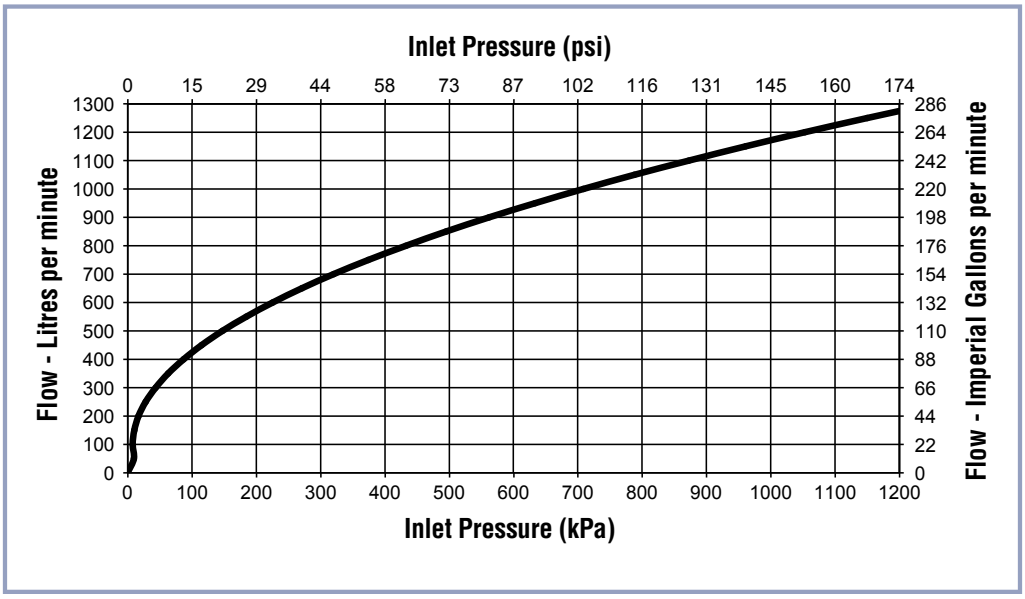

Email: info@hansenproducts.com
Website: www.hansenproducts.com

Max~Flo Chemical Resistance Chart

CHEMICAL TYPE	RESISTANCE LEVEL		
	Good	OK But Check Further	BAD Try to Avoid
Drinking Water	X		
Sea Water	X		
Bloat Remedies Diluted		X	
CHEMICAL TYPE	RESISTANCE LEVEL		
Acids Weak			X
Acids Strong			X
Organic Acids Weak		X	
Organic Acids Strong			X
Bases Weak	X		
Bases Strong			X
Bleach			X
CHEMICAL TYPE	RESISTANCE LEVEL		
Automotive Fuel			X
Automotive Lubricants			X
Hydraulic Fluids			X
CHEMICAL TYPE	RESISTANCE LEVEL		
Solvents			X
Hydrocarbons			X
Halogens			X
Alcohols			X
Aldehydes			X
Amines			X
Esters			X
Ethers			X
Ketones			X
CHEMICAL TYPE	RESISTANCE LEVEL		
Detergents	X		
Oxidising Agents			X
Weak Hydrogen Peroxide			X
Ozone			X
Phenols			X
CHEMICAL TYPE	RESISTANCE LEVEL		
Calcium Chloride			X

PLEASE NOTE: This chart is intended as a basic guide only. The resistance to a given chemical will vary with temperature & concentrations. Some chemicals within the group mentioned may result in different rating. For further information, please email us with your specific question.

Max~Flo Features

CLEAT
The Cleat is to lock the valve off only when using a float with a cord

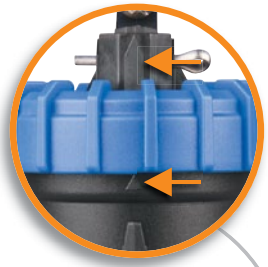

ARROW
Match valve body arrow and notch with cap arrow to ensure correct re-assembly

SELF FLUSHING PILOT HOLE
Maxflo Valve has been designed to ensure reliable operation at low and high pressures. NOTE: Pressurised water will pass through the pilot hole and over the arm when opening and closing. Water will stop passing through the pilot hole when fully closed.

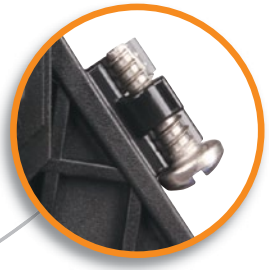

SCREW
An additional screw for attaching the extension arm or a spare screw for the float

MALE ADAPTORS
Maxflo Valve includes 20 & 25mm adaptors. Thread O-Ring end of correct size male adaptor into valve body. Tighten adaptor firmly so that the O-Ring creates a seal. The adaptor should be hard against the valve body for correct sealing.

TOP ENTRY INSTALLATIONS
Screw the adjustable float to the arm of the Maxflo valve. Adjust the mounting position to achieve the desired air gap between the threaded valve body outlet and the water level. Air Gap is adjustable from -19mm to +45mm @ 3.5 bar.

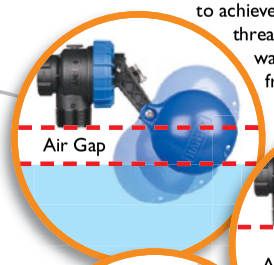

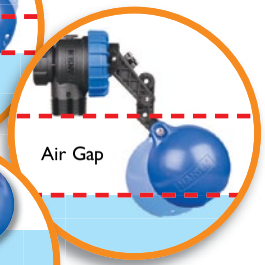

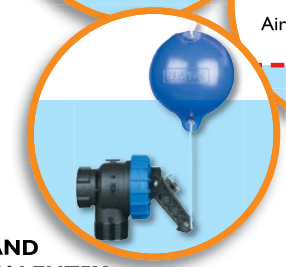

EXTENSION ARM
Maxflo Valve includes an Extension Arm. Use this Arm when a larger air gap is required between the water and threaded outlet of the valve body. Air Gap is adjustable from +65mm to +105mm @ 3.5bar.

SLOW CLOSE ACTION
The Maxflo internals have been designed with a built in delay in closing, this helps to minimise water hammer.
NOTE: the Maxflo arm may be in the close position but the valve may take up to 8 seconds to fully close. Do Not Force Float Arm.

ANTI-SYPHON HOLES
When the valve body outlet is submerged in water or has an extension outlet tube attached, the Anti-Syphon Holes have been designed to be knocked out to prevent the valve from back flowing as long as the Anti-Syphon Holes are above water level.

SIDE AND BOTTOM ENTRY INSTALLATIONS
Thread the cord through the valve body arm then through the float mounting hole and around the float to the top hole. Water level height is changed by adjusting the cord length from the top and tying off on the hole.

NOTE: The Maxflo Valve has been designed to perform at high and low pressures reliably! (0.2-12Bar) Due to the high performance of the Maxflo Valve, high rates of water turbulence can be experienced when mounting in top entry installations. To minimise water turbulence use a Hansen HFS32 with a short piece of poly pipe. This will act as a diffuser which will reduce turbulence. You may wish to use the Anti-Syphon Holes to prevent back flow when using a diffuser.

Email: info@hansenproducts.com
Website: www.hansenproducts.com

HANSEN™ Best Installed Value

Email: info@hansenproducts.com
Website: www.hansenproducts.com

Max~Flo

Diaphragm Valve Assembly Instructions

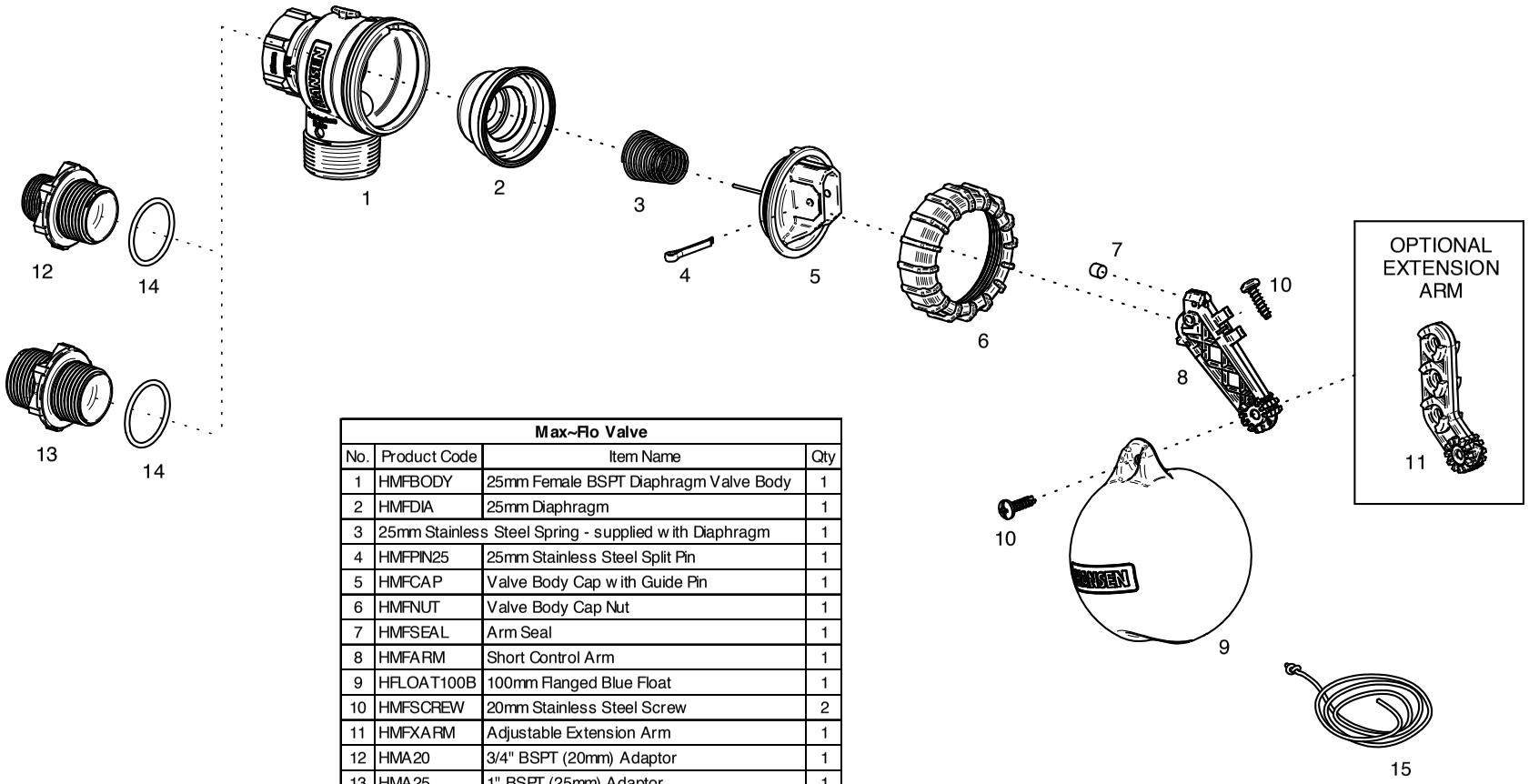

Max~Flo Valve			
No.	Product Code	Item Name	Qty
1	HMFBODY	25mm Female BSPT Diaphragm Valve Body	1
2	HMFDIA	25mm Diaphragm	1
3	25mm Stainless Steel Spring - supplied with Diaphragm		1
4	HMFPIN25	25mm Stainless Steel Split Pin	1
5	HMFCAP	Valve Body Cap with Guide Pin	1
6	HMFNUT	Valve Body Cap Nut	1
7	HMFSEAL	Arm Seal	1
8	HMFARM	Short Control Arm	1
9	HFLOAT100B	100mm Flanged Blue Float	1
10	HMFSCREW	20mm Stainless Steel Screw	2
11	HMFXARM	Adjustable Extension Arm	1
12	HMA20	3/4" BSPT (20mm) Adaptor	1
13	HMA25	1" BSPT (25mm) Adaptor	1
14	Adaptor O-Ring - supplied with Adaptor		1
15	HMFCORD	650mm Cord	1

Email: info@hansenproducts.com
Website: www.hansenproducts.com

HANSEN™
Best Installed Value

Max-Flo Installation Guide

Trough Installation:

- Flush lines into water troughs before installing Max-Flo Valve into new system
- Isolate water trough to replace valve in existing scheme
- Thread O-Ring end of correct size adaptor into valve body

Max-Flo Top Entry

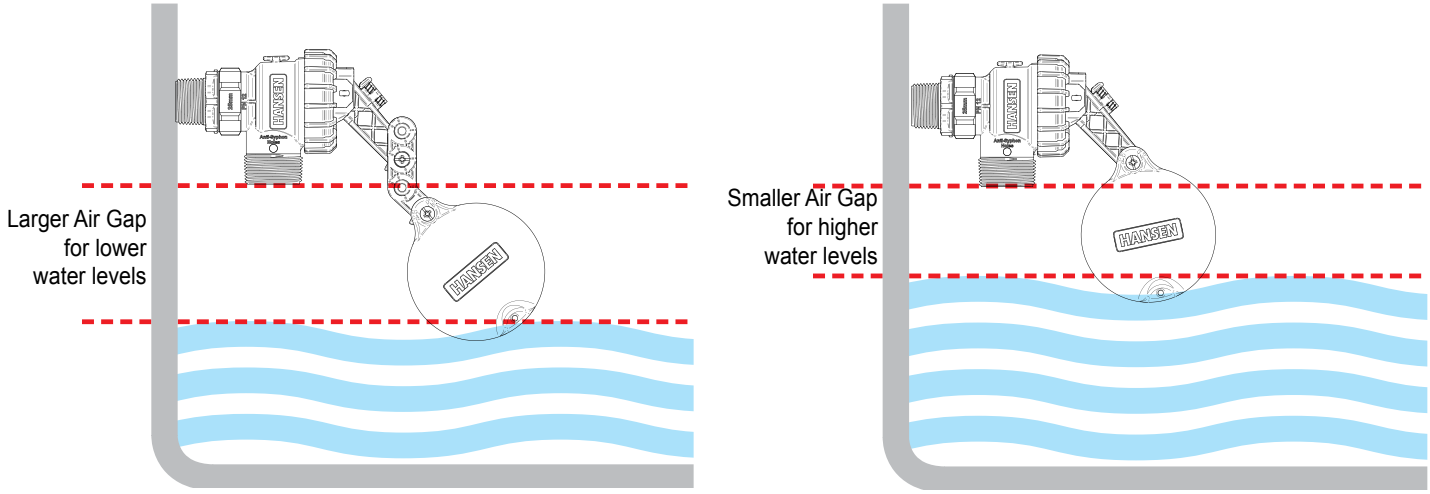

With extension arm for use with lower water levels

Top Entry Trough:

- Thread Max-Flo Valve into existing trough fitting
- Determine the on/off point and water level required
- Use supplied Adjustable Extension Arm when a larger air gap is required
- Adjust the float and arms to suit required angle

Wall Thickness Guide

Hansen Long Adaptors Maximum Wall Thickness for Troughs and Tanks when screwed into a Hansen Female Bend

Adaptor	Trough / Tank Wall
HMAL15	14mm
HMAL20	22mm
HMAL25	19mm
HMAL32	24mm

Max-Flo Installation Diagrams

Trough Installation:

- Flush lines into water troughs before installing Max-Flo Valve into new system
- Isolate water trough to replace valve in existing scheme
- Thread O-Ring end of correct size adaptor into valve body

Max-Flo Bottom Entry

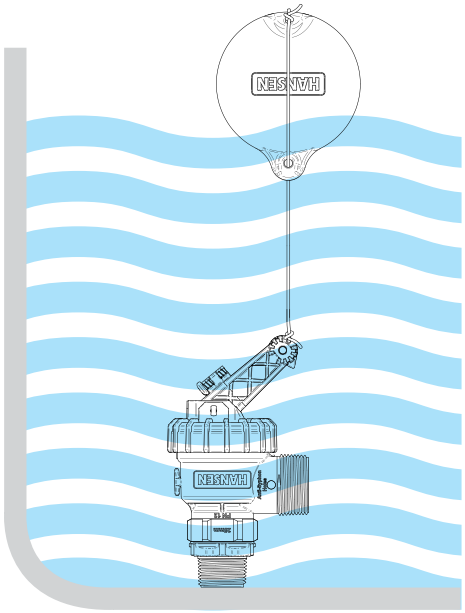

Max-Flo Side Entry

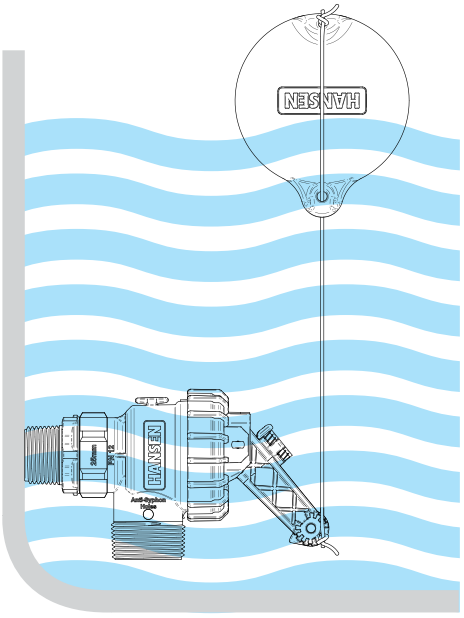

TO CHANGE ON/OFF & WATER LEVEL Adjust the length of the cord at the top of the float

Bottom or Side Entry Trough:

- Thread Max-Flo Valve into existing trough fitting
- Thread cord through the float, adjust cord to required on/off level then tie off

Tank Installation:

- Install tank fitting into water tank
- Flush lines into water tank before installing Max-Flo Valve into system
- Thread O-Ring end of correct size adaptor into valve body
- Thread Max-Flo Valve into Tank Fitting inside tank
- Thread cord through the float, adjust cord to required on/off level then tie off

Max~Flo Frequently Asked Questions

Q Can I use the Hansen Max~Flo Valve as a top entry valve with an air gap?

A Yes, the Hansen Max~Flo Valve can be installed at the top, side or bottom entry as all components come with each valve.

Q My troughs have both 20mm & 25mm threaded inlets. Does the Hansen Max~Flo Valve come in both sizes?

A Yes the Hansen Max~Flo Valve comes with the required components to install in 20mm or 25mm threaded inlets. This of course means you only have to buy one valve for all sized inlets.

Q Will the higher flow cost me more to run my pump?

A No, because the Hansen Max~Flo Valve is more efficient than what you are used to. The reduced operating pressure required will equate to higher flows at lower pressures at your pump which in turn will reduce pumping time and cost.

Q At present I get valve bounce in my troughs, will the Hansen Max~Flo Valve stop this?

A Yes, valve bounce is created from high flows at high pressures, the Hansen Max~Flo Valve opens and closes slower than other valves so will reduce incidences of this problem.

Q I have problems with having to constantly clean my valves as my water supply can get dirty at times, how will your valve handle these conditions?

A Our patent pending “Self Cleaning Pilot” will increase durability and suitability in dirty water situations.

Q At present I have noticed some shuddering & noise in my pipelines when my pump starts & stops, will your valve stop this?

A Yes this is called water hammer, we have designed the Hansen Max~Flo Valve to open & close slower than other valves effectively varying the flows at these times to minimise the chance of water hammer.

Q What pressure can I run my Hansen Max~Flo Valve at?

A The Hansen Max~Flo Valve will operate from 0.2bar to 12bar.